USB to UART

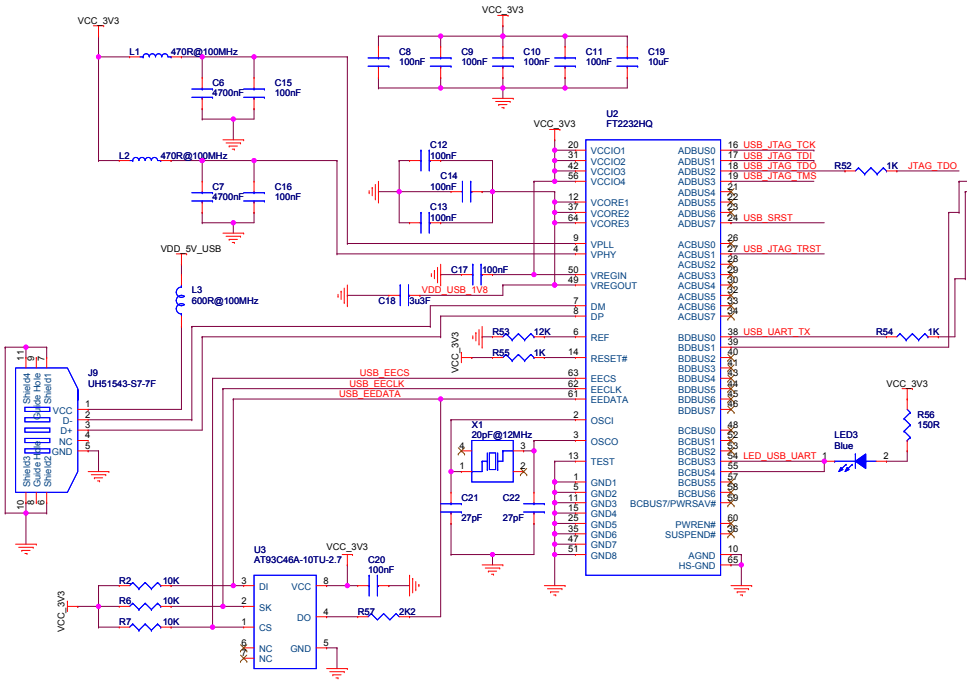

eS-Wi-Fi module reference schematic ISM43362 ISM43340,ISM43341 (L44 or L44+10 package)

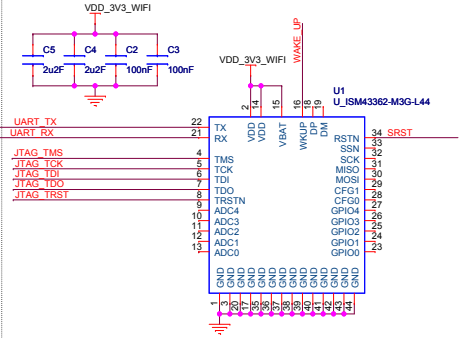

JTAG and Reset Switches

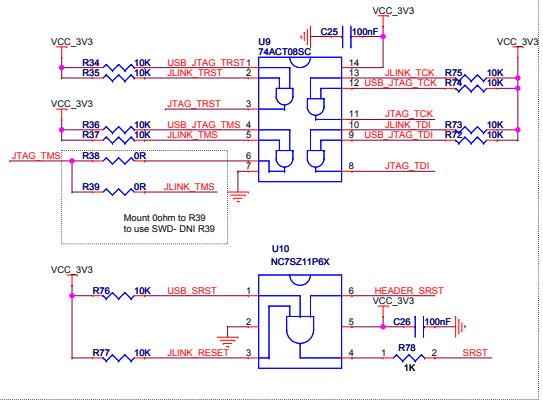

Breakout Header

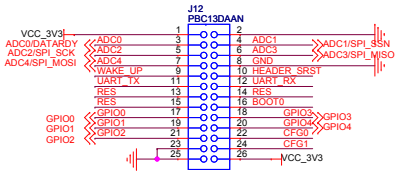

JLINK Header

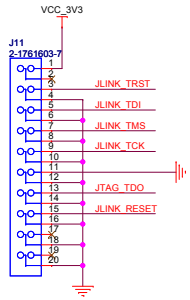

Power and LEDs

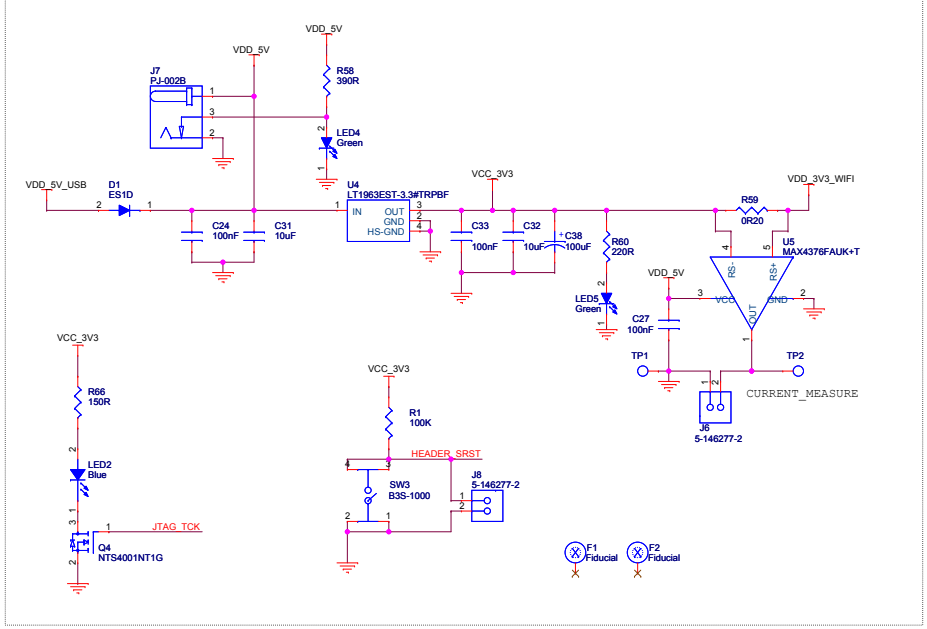

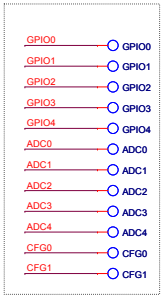

Mini-USB Port

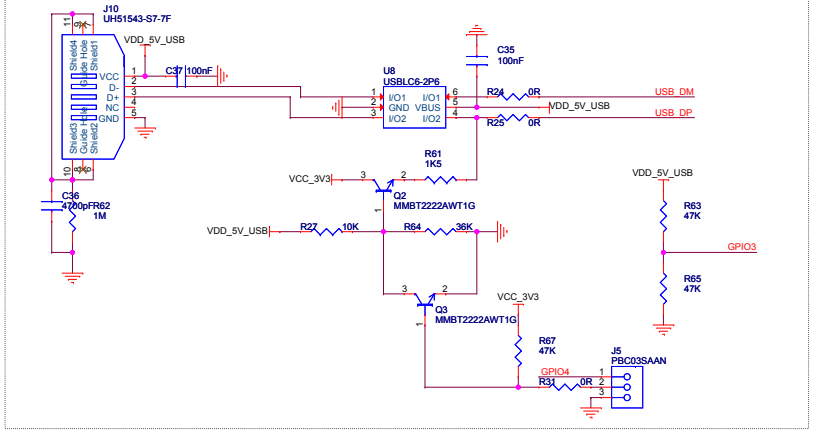

Inventek Systems

Copyright 2011. All Rights Reserved
Confidential Information

Title: ISM43362 EVB		
Size: C	Doc.: ISM43362_M3G_L44_DOC_SCH_10011	Rev.: A
Date: Thursday, September 19, 2013	Sheet: 2 of 3	