ISM420 SiRFstarIV™ SIP GPS Module

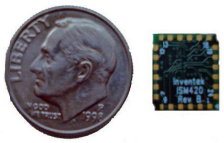

Introduction

Inventek Systems would like to announce a new SiRFstar IV SIP GPS Receiver Module with **twice** the sensitivity of the SiRFstar III. Several key features about this module are:

- The module is capable of generating and storing extended ephemeris data to an external device for much faster hot starts in weak signal environments.
- Built in jamming detection and mitigation to permit fast and accurate navigation solutions in high noise environments.
- Ability to use an external mems device for wakeup when motion is detected, thus reducing power consumption for tracking devices.
- An addition 3 dB in sensitivity over the world class SiRF Star III devices.
- < 10 mW @ 1.8 volts required to maintain fixes in TricklePower mode for the ultimate in low power requirements.

The Inventek ISM420 is a 48 channel global positioning system (GPS) receiver in a very compact Surface Mount Device (SMD) GPS module with high sensitivity, high gain, and low power. The small form factor GPS receiver is designed for a broad spectrum of OEM applications and is based on the fast and deep GPS signal search capabilities of CSR SiRFstarIV™ architecture.

Ordering Information

Device	Description	Ordering Number
ISM420	GPS Module, Form Factor 1, Commercial Temp	ISM420R1-CT
ISM420EVB	Evaluation Board, UART/SDIO/SPI, ISM420	ISM420R-EVB
ISM420INT	Interposer Board, DIP,UART, ISM420	ISM420R-INT

Features

- Host UART or SPI or I2C interface
- High sensitivity navigation engine (PVT) tracks as low as -163dBm
- 48 track verification channels
- SBAS (WAAS or EGNOS)
- Altered search strategy for improved weak-signal acquisition
- Client Generated Extended Ephemeris
- Input I/O +3.3 V tolerant
- Single power supply voltage 1.8V.
- Better identification and dismissal of jamming signals through enhanced Carrier Wave (CW) detection.
- Anti-jamming Features dismissal of jamming signals
- Removes in-band jammers up to 80 dB-Hz
- Tracks up to 8 CW jammers
- Incremental ephemeris collection allowing quicker time-to-first-fix TTFF.
- Lead Free Design which is compliant with ROHS requirements
- Shielded Module

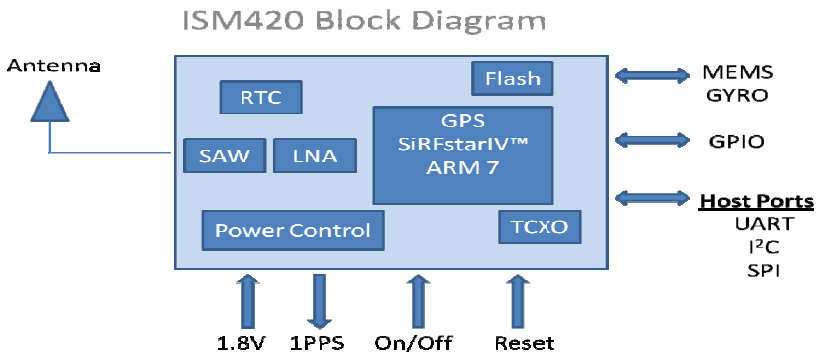

Applications

- Industrial Handhelds
- Hand-held Device for Personal Positioning and Navigation
- PDA, Pocket PC, computing devices
- Fleet Management / Asset Tracking
- AVL and Location-Based Services
- Cellular handsets
- Cameras, Asset tracking

Package

- 9.5 mm x 10.5mm x 2.4mmm
- 24-pin LGA, 1.33mm pitch

Power Ratings

- Single supply voltage: 1.8VDC ±5%
- Trickle Power : <10 mW
- Current: 45mA with LNA at full power

Temperature Range

- Operating: -30°C to +85°C
- Storage: -40°C to +85°C
- Humidity: 10% to 95%, Non-condensing

Receiver Sensitivity

- Tracking Mode: -163dBm
- Course-aided : -158dBm
- Autonomous Mode: -148dBm

Tracking and Autonomous Acquisition Sensitivity specs where determined through the use of 12 Channel Spirent GPS Simulator in a controlled RF Laboratory Environment (Open sky).

Performance

- Time to first Fix Hot Start: 1 sec.
- Time to first Fix Warm Start : <35 sec.
- Time to first Fix Cold Start: <35 sec.
- Re-Acquisition (Valid EE): 100 m

Host Interface

- SPI or UART or I^2C

Please check www.inventeksys.com for the latest support.

Inventek Systems, LLC.
2 Republic Road
Billerica Ma, 01862